SAMAN

SAMANDEHAN NOANDISH CO.

ISO 9001
Registered Firm
CISQ IMQ

Engineered Pipe Supports

Pipe Clamp

Size range: 1/2 inch thru 52 inch.
Material: Carbon Steel, Stainless Steel, Alloy Steel.
Finish: Plain, Galvanized.
Bolting Type: 2-Bolt, 3-Bolt, 4-Bolt.

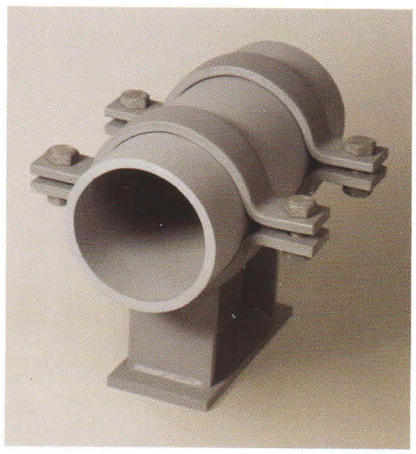

Unit: mm

NPS (inch)	DN	Pipe Clamp Dimension (mm)					Flat	Bolt
		d	a	b	c	f		
1/2	15	22	53	46	15	12	30*5	M10*35
3/4	20	27	66	46	15	12	30*5	M10*35
1	25	34	72	46	15	12	30*5	M10*35
1 1/4	32	43	82	46	15	12	30*5	M10*35
1 1/2	40	49	88	46	15	12	30*5	M10*35
2	50	61	108	54	18	14	40*6	M12*40
2 1/2	65	77	122	54	18	14	40*6	M12*40
3	80	89	136	54	18	14	40*6	M12*40
4	100	115	178	70	24	16	50*8	M16*50
5	125	140	204	70	24	16	50*8	M16*50
6	150	169	232	70	24	16	50*8	M16*50
8	200	220	284	70	24	16	50*8	M16*50
10	250	273	348	86	30	19	60*8	M20*55
12	300	324	398	86	30	19	60*8	M20*55
14	350	356	432	86	30	19	60*8	M20*55
16	400	407	498	104	36	23	70*10	M24*65
18	450	457	550	104	36	23	70*10	M24*65
20	500	508	600	104	36	23	70*10	M24*65
24	600	610	702	104	36	26	80*10	M24*75
28	700	712	804	104	36	26	80*10	M24*75
30	750	762	854	104	36	26	80*10	M24*75
32	800	813	905	104	36	26	80*10	M24*75
36	900	915	1007	104	36	32	90*10	M24*80
40	1000	1016	1108	104	36	32	90*10	M24*80
42	1050	1067	1158	104	36	32	90*10	M24*80
44	1100	1120	1212	104	36	32	90*10	M24*80
48	1200	1220	1312	104	36	36	120*10	M24*85
52	1300	1320	1412	104	36	36	120*10	M24*85

Pipe Clamps of other design and sizes can be made according to costomer drawings.

3-Bolt Clamp

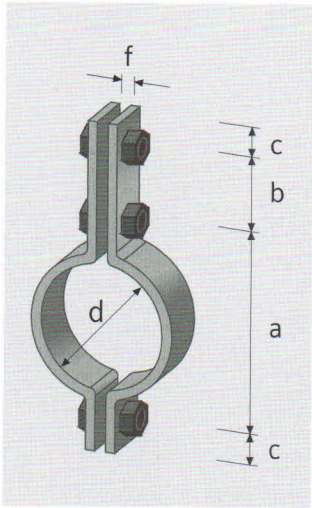

2-Bolt Clamp

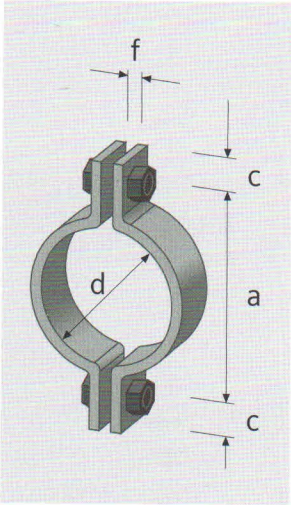

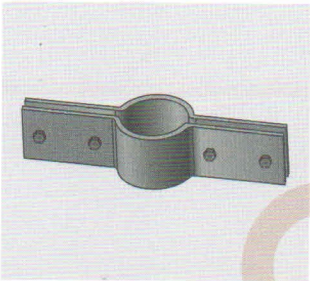

Riser Clamp

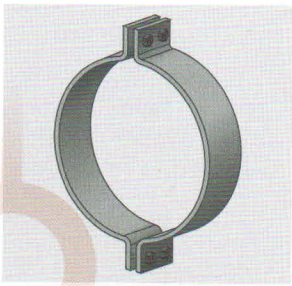

4-Bolt Clamp

Size range: 1/2 inch thru 24 inch.
Material: Carbon Steel, Stainless Steel.
Finish: Plain, Galvanized, covered with neoprene.
Restraint function: Guide, Anchor.
Thread: Isometric coarse thread.

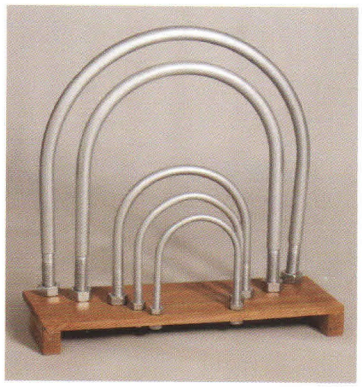

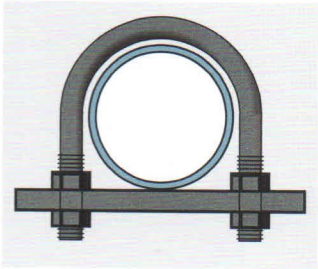

Guide

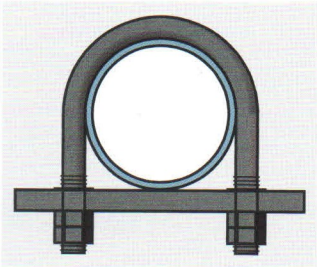

Anchor

U-Bolt with neoprene cover

Unit: mm

Pipe Size (inch)	A	B	C	D	E
½	M8	23	31	36	25
¾	M8	29	37	43	25
1	M8	37	45	44	25
1½	M10	50	60	61	35
2	M10	65	75	65	35
3	M16	92	108	98	50
4	M16	119	135	110	50
6	M20	170	190	141	55
8	M20	225	245	176	65
10	M20	280	300	203	65
12	M20	330	350	228	65
14	M24	361	385	251	75
16	M24	411	435	285	80
18	M24	461	485	300	70
20	M24	516	540	334	75
24	M24	616	640	383	75

Other sizes are available on request.

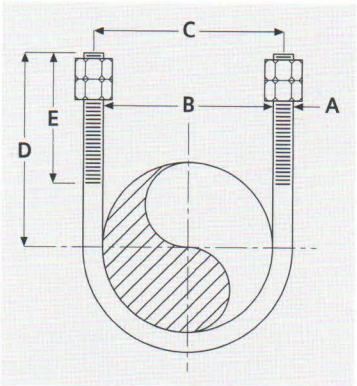

U-Bolt Dimensions

SAMAN SUPPORT
an approved vendor for pipe supports

Rigid Pipe Hangers

Rigid pipe hanger can be made of a combination of clamp, rod, clevis, turnbuckle, eye bolt, eye nut, welding lug or welded beam attachment and fish plate depending on the design of hanger.

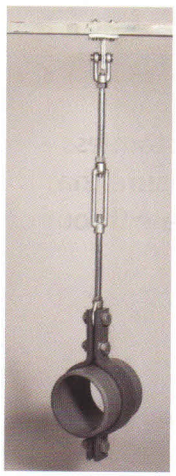

Accessories

Material: Carbon Steel.
Finish: Plain, Galvanized.

Thread Rod

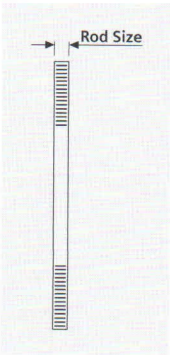

Welding Lug

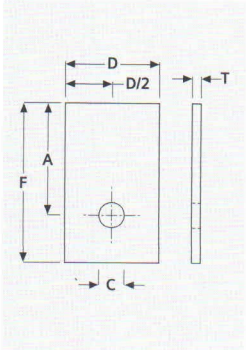

Welded Beam Attachment

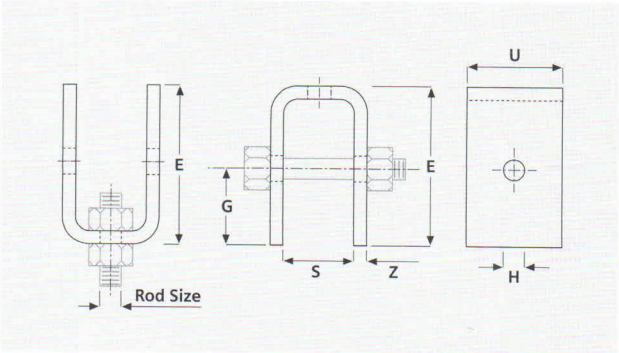

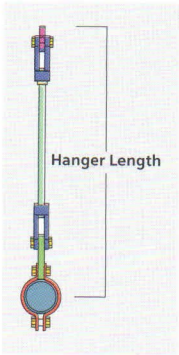

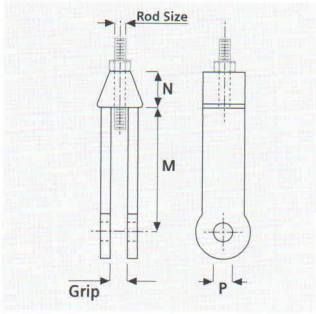

Clevis

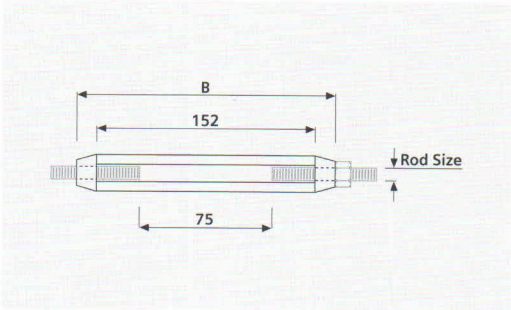

Turnbuckle

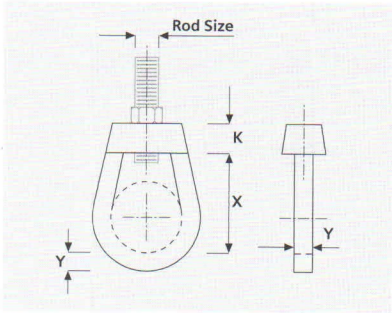

Eye Nut

Unit: mm

Rod Size	Welding Lug					Welded Beam Attachment						Clevis			Turnbuckle	Eye Nut			Load * Capacity (KN)
	D	F	T	A	C	G	Z	E	U	S	H	N	P	M	B	Y	K	X	
M10	50	50	6	30	12	22	6	75	50	40	12	16	12	95	182	10	16	38	3.5
M12	50	50	8	30	14	22	6	75	50	40	14	16	14	95	192	13	17	51	5.2
M16	60	72	10	42	18	30	10	85	75	60	18	16	18	95	204	13	17	51	9.9
M20	60	85	10	50	22	30	12	85	75	70	22	22	22	102	214	17	28	79	15.5
M24	80	105	12	60	26	40	12	115	100	75	26	35	26	127	230	17	28	79	22.4
M30	100	125	15	70	33	50	15	125	125	100	33	35	32	127	256	20	47	95	35.8
M36	100	145	20	80	39	60	20	165	150	125	39	41	38	152	276	20	47	95	52.4
M42	110	165	25	90	45	70	20	195	150	135	45	45	44	152	276	38	57	159	72.6
M48	130	190	25	105	52	80	20	210	150	150	52	57	50	178	305	38	57	159	94.6
M56	150	220	30	120	60	90	20	240	200	180	60	70	58	203	343	38	57	159	130.9
M64	180	255	35	140	68	100	20	250	200	215	68	70	66	203	343	38	57	159	176.5

* Load capacity at max. 343° C

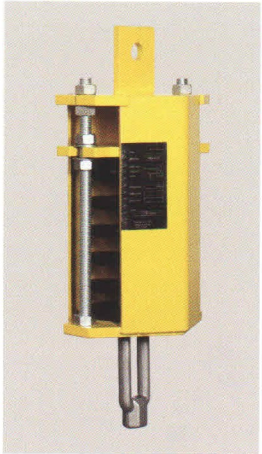

Variable Spring Hangers and Supports

Spring Supports are used to support the weight of pipe or equipment allowing it a degree of movement relative to the support structure. The stiffness of spring determines the function between load range and travel range.
In a variable spring support there is a load variation through the travel of work.

Saman spring provides springs in 15 sizes covering a wide range of loads in different travel ranges, all based on the requirements of MSS-SP58 and relevant standards.

Type Designation and Application

V 8 - 1 - F

- F: Assembly Configuration (H, B, F, A, T)
- 1: Travel Group (1, 2, 3, 4, 5)
- 8: Size Number (from 0 to 14)
- V: Symbol of Variable Spring

Assembly Configuration and Application

Assembly Configuration	Appearance	Application
H (Hanging Type)	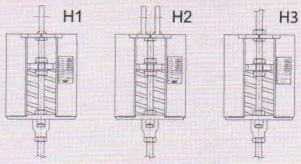	• Most frequently used. • Fitted with both upper/lower connection for suspension
B (Bracket Type)	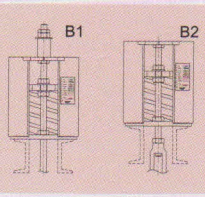	• Frequently used for simple installation. • Connected to work by a rod passing through structure.
F (Mounted Type)	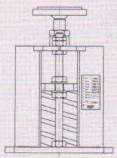	• Suitable alternative as a column support, if suspension were impossible. • PTFE Plate is recommended for higher loads and movements.
A (Angulated Type)	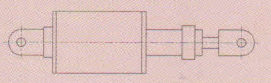	• Infrequently used as a tilted support or for eliminating the frictional force instead of supporting type (Type M).
T (Trapeze Type)	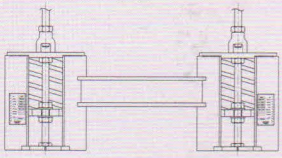	• Infrequently used, if sufficient gap between structure and pipe was not available.

Spring size vs Rod size

Size Number	Rod-size
0	M10
1	M12
2	M12
3	M16
4	M20
5	M24
6	M30
7	M36
8	M42
9	M48
10	M56
11	M64
12	M68
13	M72
14	M80

Selection Method and Table

Selection Criteria

Permissible load variation

The Permissible load variation between preset load (cold load) and operating load (hot load) is limited internationally by common specification for piping stress analysis to 25% of operating load. However Permissible load variation may vary depending on importance or sensitivity of piping system.

$$VA = \frac{abs\,(H.L. - C.L.)}{H.L.} = \frac{abs\,(K\Delta)}{H.L.}$$

Spring rate and working travel

We offer the variable springs in 5 travel ranges with correspondingly different spring rates. Travel ranges 4 and 5 relate to extra long springs and should only be used after technical evaluation of the whole system.

Travel Group					Size Number									
1	2	3	4	5	0	1	2	3	4	5	6	7	8	9
Working Travel (mm)					Load (kN)									
0.0	0	0	0	0	0.12	0.41	0.83	1.66	3.33	6.66	13.33	20.00	26.66	33.33
2.5	5	10	15	20	0.14	0.45	0.91	1.83	3.66	7.33	14.66	22.00	29.33	36.66
5.0	10	20	30	40	0.16	0.50	1.00	2.00	4.00	8.00	16.00	24.00	32.00	40.00
7.5	15	30	45	60	0.18	0.54	1.08	2.16	4.33	8.66	17.33	26.00	34.66	43.33
10.0	20	40	60	80	0.20	0.58	1.16	2.33	4.66	9.33	18.66	28.00	37.33	46.66
12.5	25	50	75	100	0.22	0.62	1.25	2.50	5.00	10.00	20.00	30.00	40.00	50.00
15.0	30	60	90	120	0.24	0.66	1.33	2.66	5.33	10.66	21.33	32.00	42.66	53.33
17.5	35	70	105	140	0.26	0.70	1.41	2.83	5.66	11.33	22.66	34.00	45.33	56.66
20.0	40	80	120	160	0.28	0.75	1.50	3.00	6.00	12.00	24.00	36.00	48.00	60.00
22.5	45	90	135	180	0.30	0.79	1.58	3.16	6.33	12.66	25.33	38.00	50.66	63.33
25.0	50	100	150	200	0.32	0.83	1.66	3.33	6.66	13.33	26.66	40.00	53.33	66.66
27.5	55	110	165	220	0.34	0.87	1.75	3.50	7.00	14.00	28.00	42.00	56.00	70.00
30.0	60	120	180	240	0.36	0.91	1.83	3.66	7.33	14.66	29.33	44.00	58.66	73.33
32.5	65	130	195	260	0.38	0.95	1.91	3.83	7.66	15.33	30.66	46.00	61.33	76.66
35.0	70	140	210	280	0.40	1.00	2.00	4.00	8.00	16.00	32.00	48.00	64.00	80.00
37.5	75	150	225	300	0.42	1.04	2.08	4.16	8.33	16.66	33.33	50.00	66.66	83.33
40.0	80	160	240	320	0.44	1.08	2.16	4.33	8.66	17.33	34.66	52.00	69.33	86.66
42.5	85	170	255	340	0.46	1.12	2.25	4.50	9.00	18.00	36.00	54.00	72.00	90.00
45.0	90	180	270	360	0.48	1.16	2.33	4.66	9.33	18.66	37.33	56.00	74.66	93.33
47.5	95	190	285	380	0.50	1.20	2.41	4.83	9.66	19.33	38.66	58.00	77.33	96.66
50.0	100	200	300	400	0.52	1.25	2.50	5.00	10.00	20.00	40.00	60.00	80.00	100.00
					Spring Rate (N/mm)									
										33.3	66.6	100.0	133.3	166.6
								11.1	22.2	44.4	88.9	133.3	177.8	222.2
					2.1	4.1	8.3	16.6	33.3	66.6	133.3	200.0	266.6	333.3
					4.1	8.3	16.6	33.3	66.6	133.3	266.6	400.0	533.3	666.6
					8.3	16.6	33.3	66.6	133.3	266.6	533.3	800.0	1066.6	1333.3

Note) It is recommended to select between the red lines.

Selection Example

Step 1 . Input Data

Operating Load: W=12,000 (N)
Travel: Δ=20 (mm) (upward)
Type F to be applicable
Permissible variability: 25%

Step 2 . Determination of spring size & stiffness

From selection table for a given load 12,000N, Size 5 is selected.

$$k \leq \frac{25\%\ (H.L.)}{abs\ (\Delta)} = \frac{(25\%)\ (12{,}000N)}{20\ (mm)} = 150\ (N/mm)$$

k = 133.3*(N/mm)* V5-2-F is selected

Step 3 . Determination of cold load

$$CL = H.L + k\Delta = 12{,}000 + 133.3 \times 20 = 14{,}666\ (N)$$

Step 4 . Determination of variation

$$VA = \frac{abs\ (H.L. - C.L.)}{H.L.} = \frac{(133.3)\ (20)}{12{,}000} X100 = 22.2\%$$

The selected spring is loaded and locked on a preset load of 14,666 N.
Unlocking would be done after installation & hydrotest and before precommissioning.

Travel Group			Size Number				
1	2	3	10	11	12	13	14
Working Travel (mm)			Load (kN)				
0	0	0	53.33	66.66	80.00	100.00	133.33
2.5	5	10	58.66	73.33	88.00	110.00	146.66
5.0	10	20	64.00	80.00	96.00	120.00	160.00
7.5	15	30	69.33	86.66	104.00	130.00	173.33
10.0	20	40	74.66	93.33	112.00	140.00	186.66
12.5	25	50	80.00	100.00	120.00	150.00	200.00
15.0	30	60	85.33	106.66	128.00	160.00	213.33
17.5	35	70	90.66	113.33	136.00	170.00	226.66
20.0	40	80	96.00	120.00	144.00	180.00	240.00
22.5	45	90	101.33	126.66	152.00	190.00	253.33
25.0	50	100	106.66	133.33	160.00	200.00	266.66
27.5	55	110	112.00	140.00	168.00	210.00	280.00
30.0	60	120	117.33	146.66	176.00	220.00	293.33
32.5	65	130	122.66	153.33	184.00	230.00	306.66
35.0	70	140	128.00	160.00	192.00	240.00	320.00
37.5	75	150	133.33	166.66	200.00	250.00	333.33
40.0	80	160	138.66	173.33	208.00	260.00	346.66
42.5	85	170	144.00	180.00	216.00	270.00	360.00
45.0	90	180	149.33	186.66	224.00	280.00	373.33
47.5	95	190	154.66	193.33	232.00	290.00	386.66
50.0	100	200	160.00	200.00	240.00	300.00	400.00
			Spring Rate (N/mm)				
			533.3	666.6	800.0	1000.0	1333.3
			1066.6	1333.3	1600.0	2000.0	2666.6
			2133.3	2666.6	3200.0	4000.0	5333.3

Note) It is recommended to select between the red lines.

Constant spring Hangers and Supports

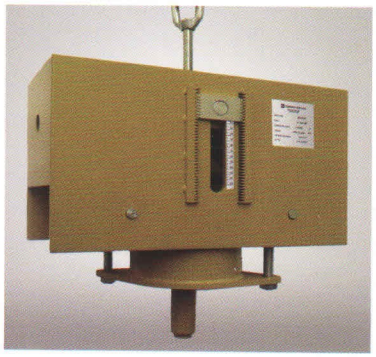

Constant effort springs are used where thermal movement of the piping system is large or the sensitivity of the system does not accept the variability of the variable spring.

In a constant effort spring the load remains constant in travel range of the work by a specific mechanism which is designed and made precisely to meet the standard requirements.

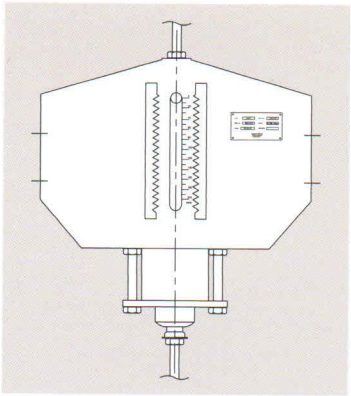

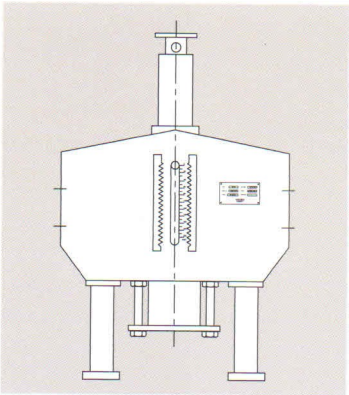

Dimensions

Considering different types, sizes and constructions, for dimensions of springs and installation details please contact us.

SAMAN SUPPORT
speciallist in pipe support engineering

Engineering Services

We can provide consulting services for pipe stress analysis and offer you the best support choices technically and economically on request.

Saman support engineers are available to serve you at field to make sure everything is going on it's proper way of work.

PTFE Sliding Plate

PTFE sliding plate consists of a PTFE plate counter faced with a stainless steel mirror plate. The assembly is designed to ensure that the PTFE plate is always covered by the mirror plate throughout the expected design movement.

PTFE plate bearing is one of the best choices to provide low friction sliding because of non-sticking property of PTFE material. The PTFE plate can be securely bonded to the recessed carbon steel plate in a specific process to provide a permanent reliable connection between the embedded plate and PTFE.

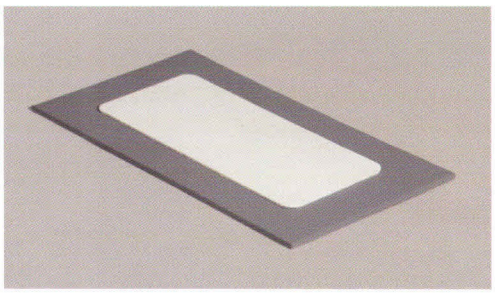

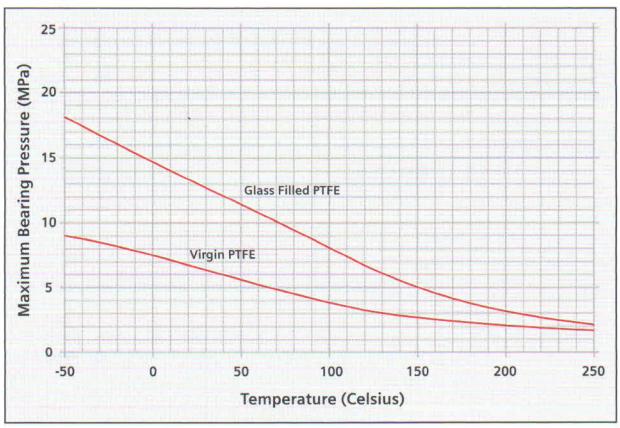

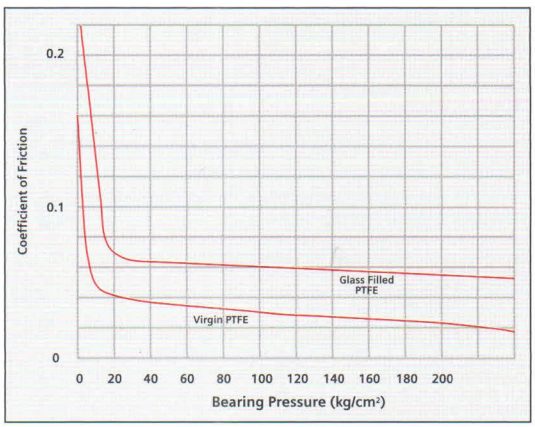

Stainless Steel Mirror Plate

We supply AISI 304 stainless steel plate with one side mirror finish covered by a PVC protective film suitable for sliding plate assembly.

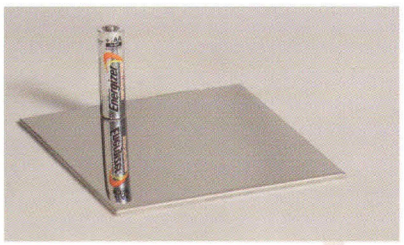

Stainless steel mirror plate

Graphite Sliding Plate

Graphite sliding plate is an alternative for high temperature applications. Specific considerations should be taken to account for application of graphite slide bearings.

Hardwood insulation

Hardwood insulation parts in different forms and sizes are available for support of cold pipes, tanks and drums. We offer quality hardwood in accurate dimensions impregnated considering the working conditions.

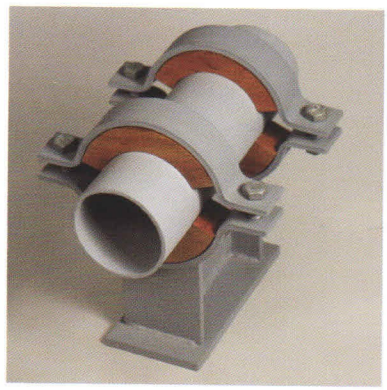

Unit: mm

Pipe Size	Hardwood Dimensions		
DN	di	do	b
15	22	61	40
20	27	77	40
25	34	77	40
32	43	89	40
40	49	89	40
50	61	115	50
65	77	115	50
80	89	140	50
100	115	169	50
125	140	220	50
150	169	220	50
200	220	273	60
250	273	324	60
300	324	407	70
350	356	407	70
400	407	457	70
500	508	610	100
600	610	712	100

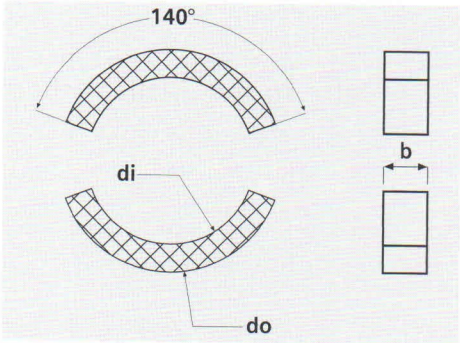

Hardwood dimension in half pipe section blocks

wooden pillow for support of cold drums

Densified Wood

Densified Wood is usually used for heavy duty support of cold pipes and tanks.

Some specifications of densified wood:

-Low specific weight
-High compressive strength (2500 Kgf/cm^2)
-Water resistant
-Abrasion and wear resistant
-Temperature Stability (-200° C up to +90° C)
-Low thermal conductivity (0.3 W/m.° K)
-Low coefficient of linear expansion

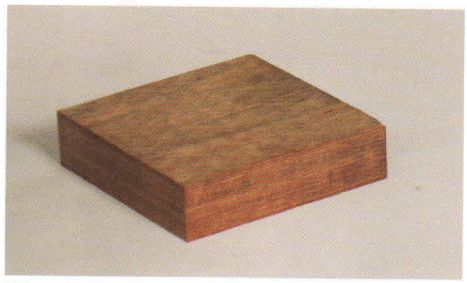

Densified wood block

Rigid polyurethane foam insulation

Rigid polyurethane foam insulation represent the most technologycal and convenient solution for insulation of cold and cryogenic piping systems in oil/gas and petrochemical plants.

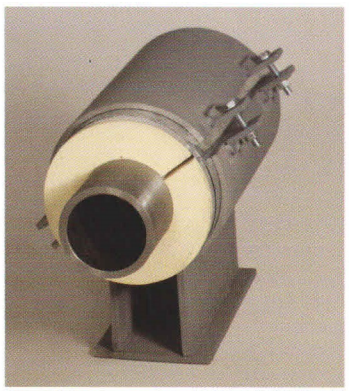

Rigid HD PUF insulation parts

High density rigid polyurethane foam is suitable for the insulation of cold pipe supports where strong mechanical characteristics are necessary as well as high insulation properties. The HD PUF insulation part can be shaped as pipe half section or rectangular block according to project pipe support drawings.

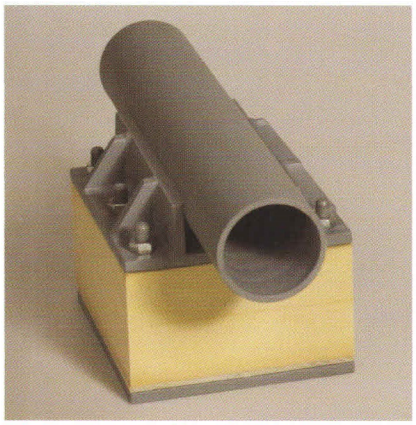

Support assembly with high density polyurethane foam block

Rigid LD PUF insulation parts

Low density rigid polyurethane foam is used for cold insulation of piping systems (line insulation) and made prefabricated in pipe half sections to be used as a single or multi layer insulation.
We produce the PUF insulation parts using the latest European technology and machinery for high qyality foaming and CNC cutting.

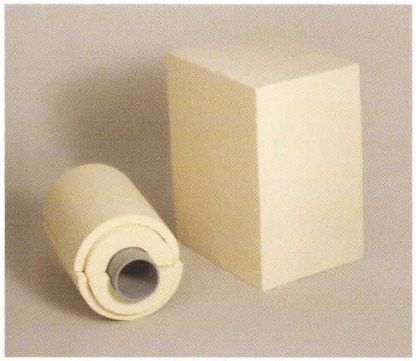

Low density polyurethane foam for line insulation

Rigid PUF Typical Properties

Density (Kg/m³)	40	160	224	320
Closed Cell Content (% vol.)	>90			
Compressive Strength at 20° C (MPa)	0.2	2.0	4.0	7.0
Thermal Conductivity at 20° C (W/m.°k)	0.023	0.032	0.035	0.041
Application temperature (°C)	-190 up to +120			
Water Absorption (% vol.)	0.19	0.17	0.15	0.12
Flammability	Class B2			

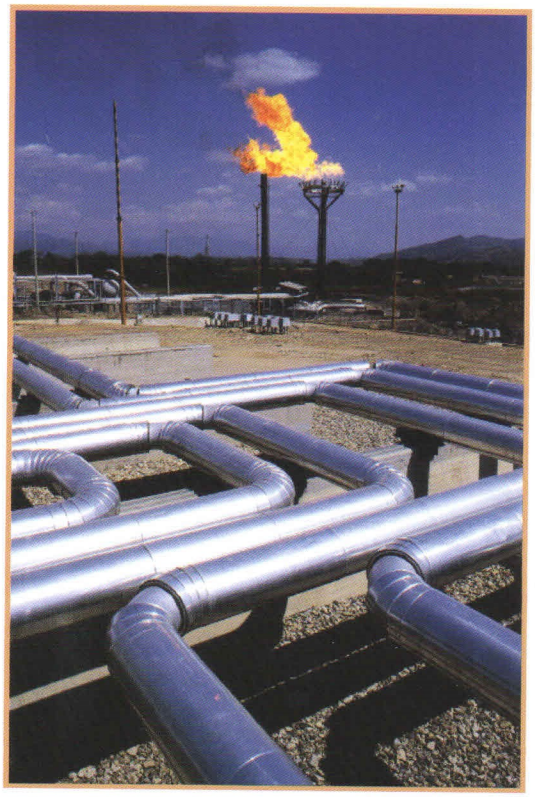

شرکت ساماندهان نواندیش

(سهامی خاص)

شرکت ساماندهان نواندیش با هدف ارائه خدمات به پروژه‌های نفت، گاز، پتروشیمی و نیروگاهی در سال ۱۳۸۵ شروع به تولید قطعات تکیه‌گاه‌های لوله نموده است و تولیدات این شرکت طی سالیان متوالی در پروژه‌های مناطق مختلف کشور مورد استفاده قرار گرفته است.

دانش فنی و فرایند ساخت هر یک از قطعات با بررسی جامع مشخصات فنی و عملکرد آن قطعات و نیز مطالعه طرح‌های مورد استفاده در پروژه‌های گوناگون و استانداردهای حاکم بر آن‌ها تدوین و اجرا شده است.

این شرکت با بکارگیری تکنولوژی و ماشین‌آلات پیشرفته و تسلط بر دانش مهندسی تکیه‌گاه‌های لوله، مصمم است به مشتریان خود قطعاتی مطابق با استانداردهای بین‌المللی و با کیفیتی درخور این صنایع ارائه نماید و به سهم خود به تسهیل و ارتقاء سطح کیفی اجرای پروژه‌های ملی کمک نماید.

www.samansupport.com
info@samansupport.com
Tel: +98 21 56 41 72 34
Fax: +98 21 56 41 71 46

ATI Negar: 88 940 574-6
Design, Print & Advertising